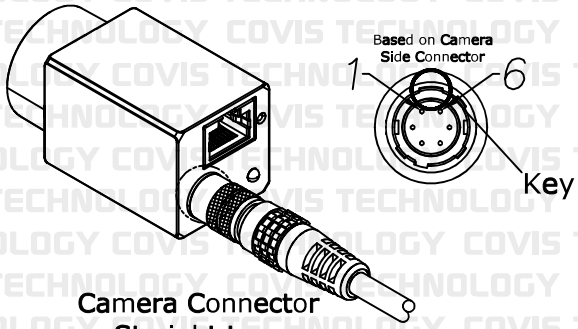

Camera Connector
Straight type

PWR(T)-□□-□-HA6F-□-□□□□

- PWR : Power / PWRT : Power+IO — Camera Maker
- Interface
- Cable Type
- Left(Camera) Connector 6Pin Female Straight Type
- Right(PLC) / F : Flying / A : Adapter
- Cable Length ex) 050 : 5M
- Cable Type R : Robot / N : Nomal

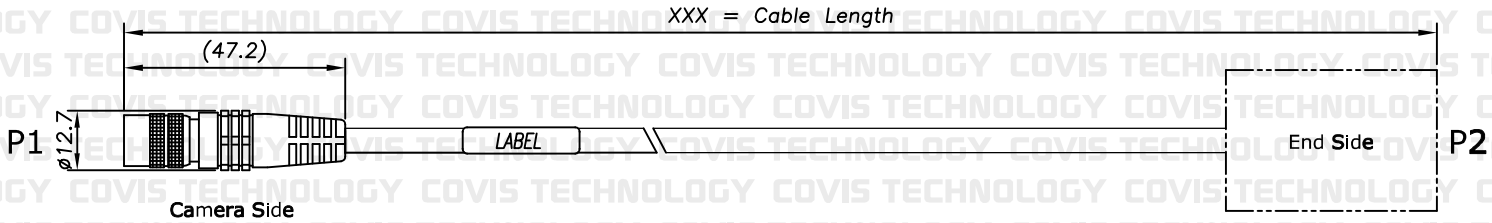

P2

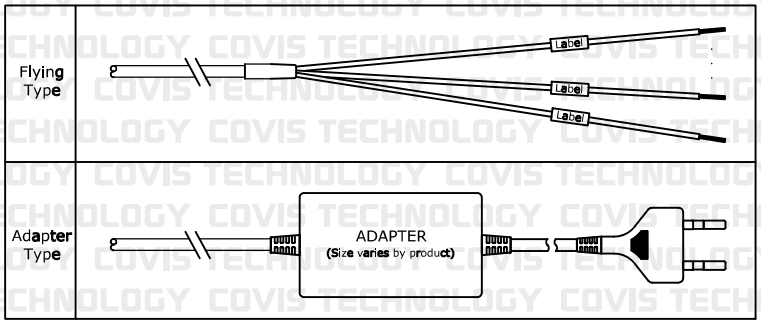

UNIT	mm	DWG.	CYS	ITEM	POWER CABLE
DATE	2024.05.22	APPROVAL		PART NO.	PWR(T)-**-*-HA6F-*-***R(N)
COVIS Technology Co., Ltd					